FOR-1351 Rev.1.0

REVISION RECORD				
REV	ECN	DESCRIPTION	DRFT	DATE

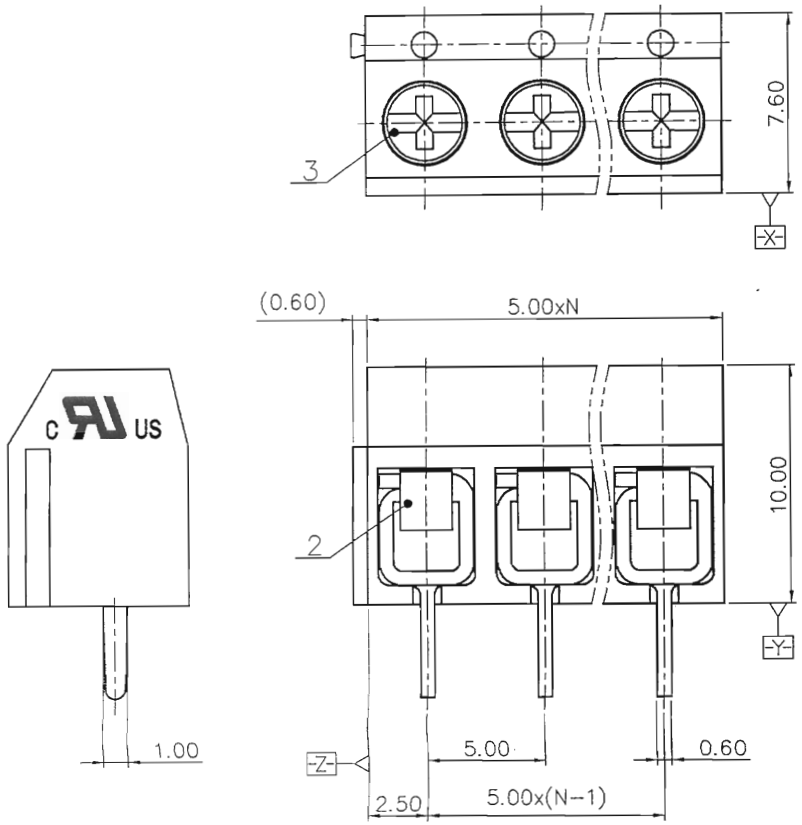

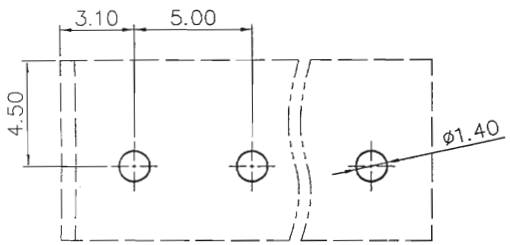

PCB LAYOUT

NOTES1:

UL Standard

1. Rated voltage/current : 300V / 10A
2. Torque value : M2.5 , 2.60Lb.in
3. Wire range : 22~14AWG

IEC Standard

1. Rated voltage/current : 250V / 15A
2. Torque value : M2.5 , 0.29N·m
3. Wire range : 0.75~1.5mm²

NOTES2:

1. Dimension shall be interpreted per ASME Y14.5-2009
2. Pitch : 5.00mm, Poles : N=02-xxP
3. Stripping length : 5~6mm
4. Withstanding voltage : AC2000V/1Min
5. Operating temperature: -30°C~+120°C
6. Undimensioned tolerances:

Pitch range in mm			Nominal dimension range in mm					— ⌒ ⌭
TO 6	Over 6 TO 10	Over 10 TO 24	TO 30	Over 30 TO 60	Over 60 TO 100	Over 100 TO 150	Over 150	0.1/10 ∠
±0.15	±0.20	±0.30	±0.30	±0.50	±0.70	±1.00	±1.30	±2°

7. RoHS Compliance

DG306 - 5.0 - XXP - 1Y - 02A (H)

- (H) — (RoHS)
- 02A — (Customer Request)
- 1Y — (Color): 1.(Grey) 2.(Blue) 3.(Black) 4.(Green) 5.(Orange) 6.(Red) 7.(Transparent) 8.(Yellow) 9.(White)
- XXP — (Single Pitch)
- XXP — (Poles)
- 5.0 — (Pitch)
- DG306 — (Series No.)

文管中心 研发专用 2019.2.22 (仅限内部使用，对外无效)

ITEM	NAME OF PART	MATERIAL	NOTES
4	Pin header	Copper alloy	M2.5/Sn plated
3	Screw	Steel	M2.5/Zn plated
2	Spring	Stainless steel	
1	Housing	PBT	UL94V-0

DETACHED LISTS

PART NO.: /

APPD: Zhou Min 2019.1.16

CHKD: Jay.Z 2019.1.16

DRFT: BYH 2019.01.12

THIRD ANGLE PROJECTION

DEGSON® 宁波高松电子有限公司 NINGBO DEGSON ELECTRICAL CO., LTD

NAME: DG306-5.0-XXP-1Y-02A(H)

TITLE: CUSTOMER DRAWING | REV: T0

DRAWING NO.: DG306-5.0-C02 | SHEET: 1/1

MM (INCH) | DO NOT SCALE DRAWING | SCALE: 1:1