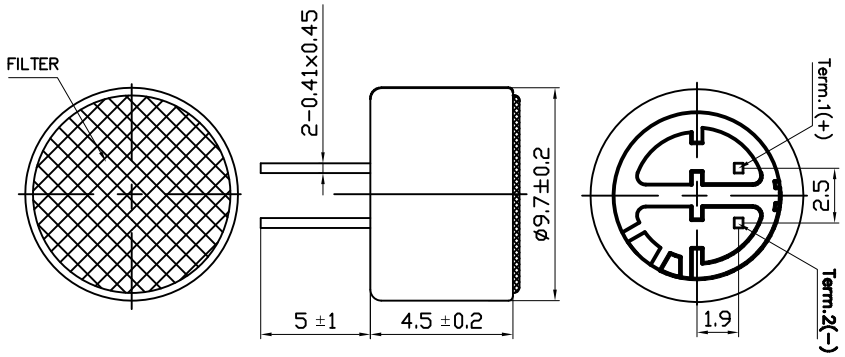

原理图

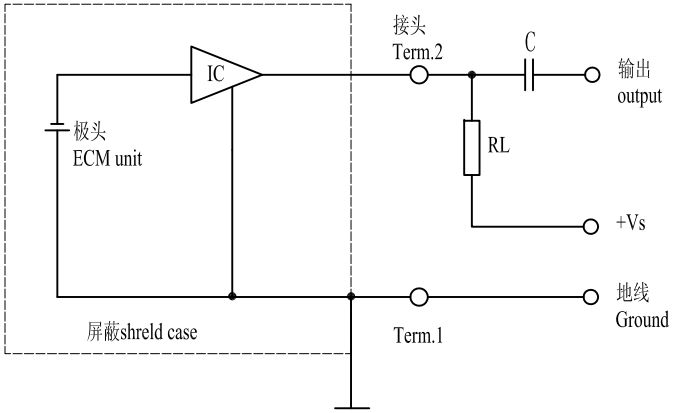

编号 NO.	项目 Items	规格 Specifications
1	额定电压 Rated Voltage	4.5V
2	工作电压 Operating Voltage	1.5V~10V
3	灵敏度 Sensitivity	-41± 3dB (0dB=1V/pa at 1KHz)
4	消耗电流 Current Consumption	0.5mA Max
5	频率范围 Frequency	100~16,000Hz
6	信噪比 S/N Ratio	≥60dB
7	灵敏度减低 Sensitivity Reduction	-3dB (Vcc=4.5V to 3.0V)
8	方向性 Directivity	Omnidirectional
9	测试条件 Testing Condition	1000Hz, Vs=4.5V, RL=2.2K Ω
10	壳体材料/颜色 Shell Material/Color	AL/Silver
11	工作温度 Operating Temperature	-25~+55 ℃
12	贮存温度 Store Temperature	-25~+55 ℃
13	重量 Weight	1g
备注 Note:	Compliance with ROHS	

NO.	DATE	REVISION	REFERENCE DWG
4			
3			
2			
1			

TOLERANCES UNLESS NOTED OTHERWISE
.X ±
.XX ±
.XXX ±
90° FORMED +2°
ANGLES -1°

FIRST ANGLE PROJECTION

DRAWN		KEPO MODEL NO.	CUSTOMER
DESIGN	水成锋	KPCM-G28B-P	
CHECKED			CUSTOMER NO.
APPROVED	梁树棠	DWG NO.	
DATE	12.10.15	KP3.841.411.02R	VER 1.1 SCALE
CONTRACT NO.			UNIT mm SHEET
AGENCY APPROVAL		KEPO CO.,LTD.	TEL:(+86)574-88370330 FAX:(+86)574-88370329