FOR-1351 Rev.1.0

REVISION RECORD				
REV	ECN	DESCRIPTION	DRFT	DATE

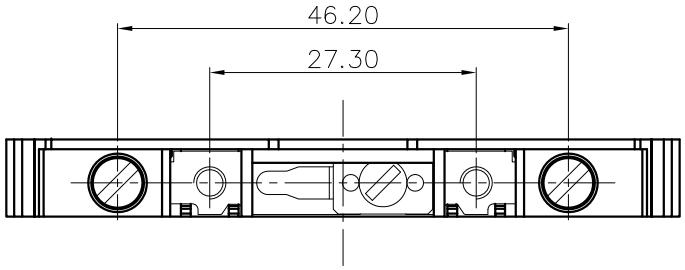

DCTK6 – 01P – 1Y –00A (H)

- DCTK6: (Series No.)
- 01P: (Poles)
- 1Y: (Single Pitch)
- 00A: (Color): 1.(Grey) 2.(Blue) 3.(Black) 4.(Green) 5.(Orange) 6.(Red) 7.(Transparent) 8.(Yellow) 9.(White)
- 00A–(Standard)
- (H): (RoHS)

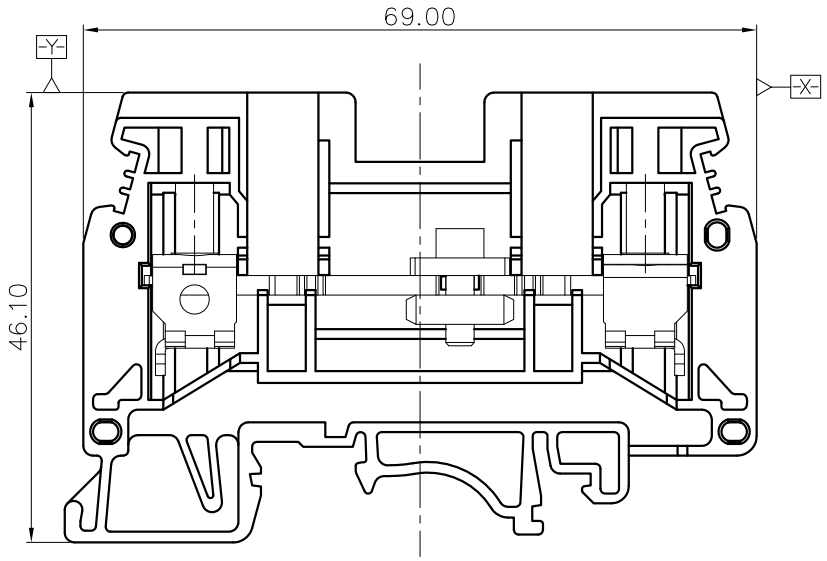

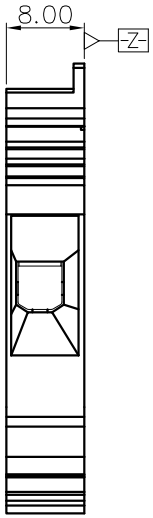

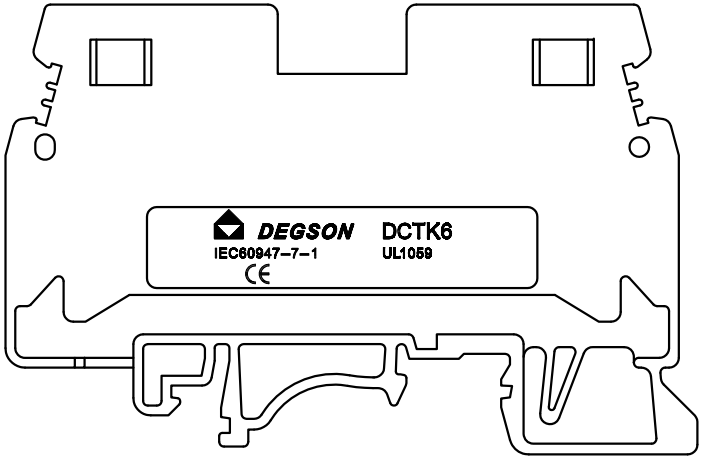

NOTES1:

UL Standard

1. Rated voltage/current : 300V / 45A
2. Withstanding voltage : AC1600V/1Min.
3. Torque value : M4 , 10.53Lb.in
4. Wire range : 20~8AWG

IEC Standard

1.

Pollution degree	3
Overvoltage category	III
Rate impulse voltage(KV)	6KV
Rate voltage(V)	630V
Rate current(A)	41A

2. Torque value : M4 , 1.2N·m
3. Wire range : 0.5~10mm²

NOTES2:

1. Dimension shall be interpreted per ASME Y14.5–2009
2. Pitch : 8.0mm, Poles : 01P
3. Stripping length : 12mm
4. Operating temperature: –40°C~+105°C
5. Undimensioned tolerances:

Pitch range in mm			Nominal dimension range in mm					– ⌒ ⌭
TO 6	Over 6 TO 10	Over 10 TO 24	TO 30	Over 30 TO 60	Over 60 TO 100	Over 100 TO 150	Over 150	0.1/10
								∠
±0.15	±0.20	±0.30	±0.30	±0.50	±0.70	±1.00	±1.30	±2°

6. RoHS Compliance

DETACHED LISTS

PART NO.: /	DEGSON® 宁波高松电子有限公司 NINGBO DEGSON ELECTRICAL CO., LTD		
APPD: /	NAME: DCTK6-01P-1Y-00A(H)		
CHKD: /			
DRFT: /	TITLE: CUSTOMER DRAWING	REV	D0
THIRD ANGLE PROJECTION	DRAWING NO.: /	SHEET	1/1
	MM (INCH) DO NOT SCALE DRAWING	SCALE	1:1