YETDA EMITTER TYPE POWER LED

Part No.	Color	T_C(^{O}K) or Wavelength	Luminous Flux	Forward Current	Forward Voltage	Operating Temperature Range	Viewing Angle
		λ D	lm	mA			2θ1/2

3W High Power LED (Emitter) Lambertian

UNIT:mm

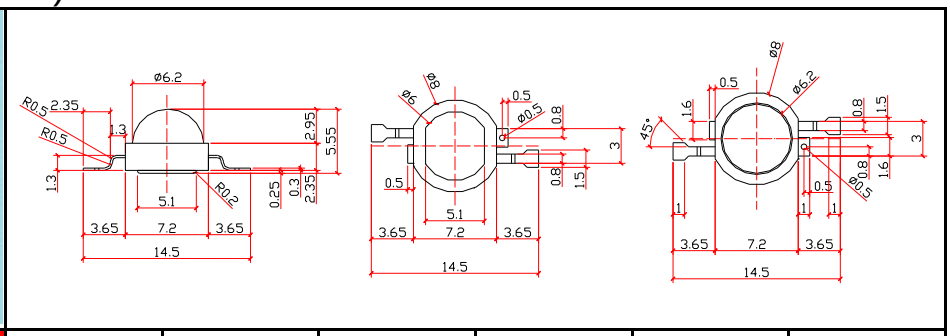

D081E	Red	660nm(λ_p)	35	700mA	1.8-2.5V	.-20℃ to +80℃	140 deg
Y081E	Yellow	590nm	70				
W081E	White	6000K-7000K	220		2.8-4.0V		
WW081E	Warm White	2700K-3500K	200				
I081E	Infrared	850nm	42(mW)		1.6-1.8V		

2W High Power RGBW LED (Emitter) **Lambertian**

UNIT:mm

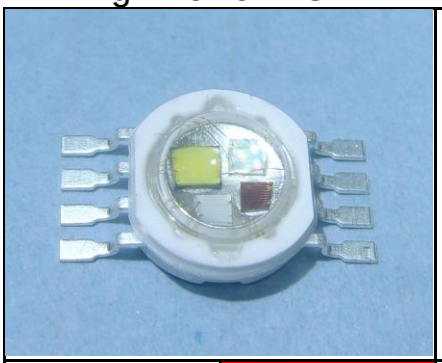

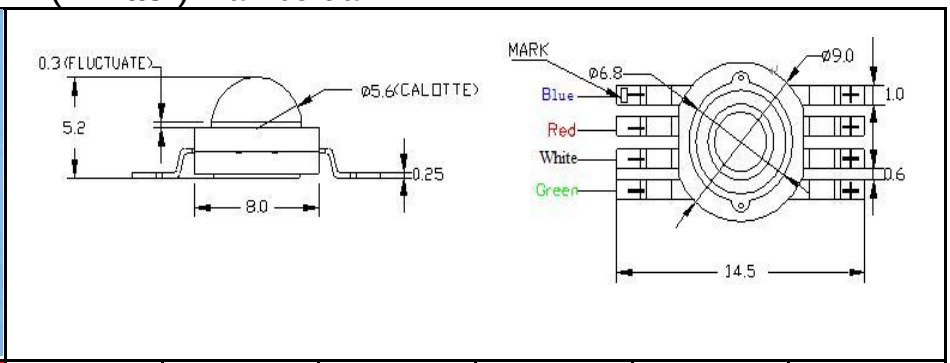

RGBWG051E	Red	625nm	70	500mA	2.0-3.0V	.-20℃ to +80℃	140 deg
	Blue	470nm	20		3.0-4.0V		
	Pure Green	525nm	100				
	White	6000K-7000K	120				