© – TE Connectivity. All Rights Reserved.

REVISIONS					
P	LTR	DESCRIPTION	DATE	DWN	APVD
	B3	ECO-20-017451	10DEC2020	RR	SZ

1. MATERIAL: HOUSING– PBT POLYESTER, BLACK. TERMINAL– 0.35 [.0138] THICK PHOS BRONZE PLATED WITH 1.27μm [.000050] THICK HARD GOLD IN LOCALIZED GOLD PLATE AREA AND 2.03μm [.000080] THICK MATTE TIN IN SOLDER AREA OVER 1.27μm [.000050] THICK NICKEL UNDERPLATE.

2. CAVITY CONFORMS TO FCC RULES AND REGULATIONS PART 68 AND REA BULLETIN 345–81, PE–76 SPECIFICATION FOR MODULAR TELEPHONE HARDWARE.

3. ALL DIMENSIONS SHOWN ARE MAXIMUM UNLESS OTHERWISE SPECIFIED.

4. TUBE PACKAGING.

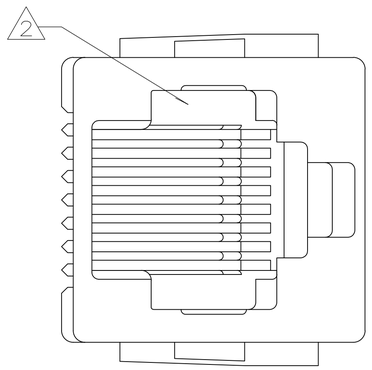

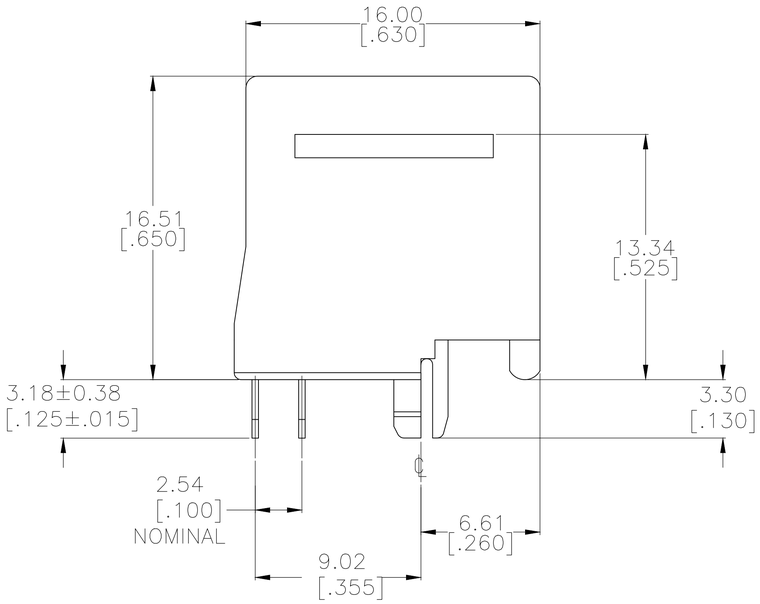

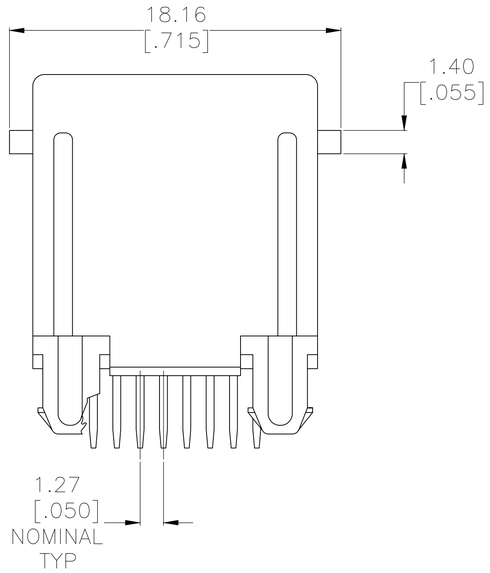

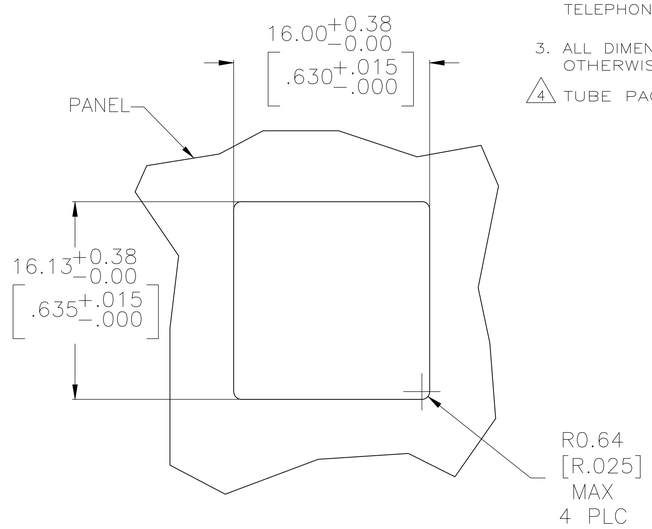

RECOMMENDED PANEL CUTOUT
SCALE 4:1

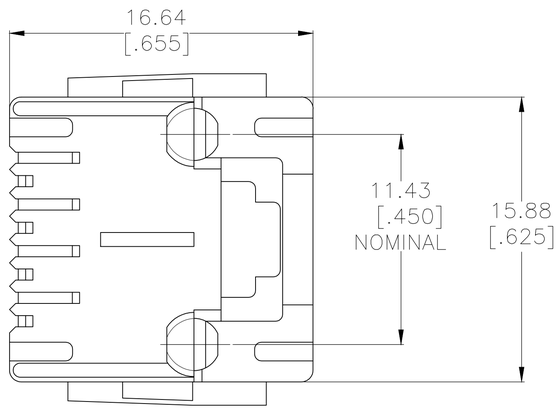

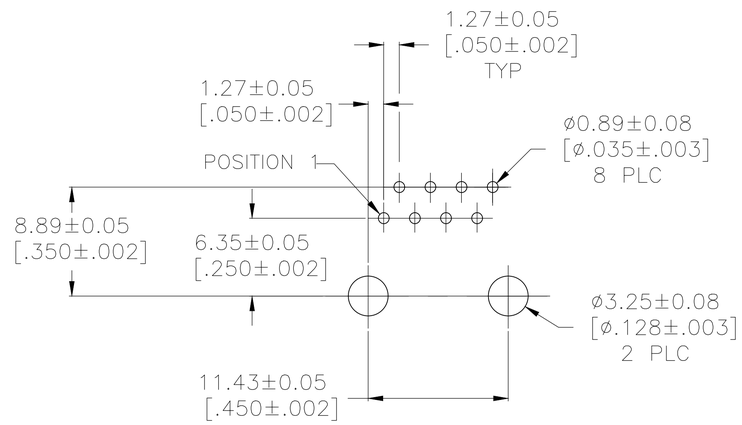

RECOMMENDED PRINTED CIRCUIT BOARD LAYOUT
COMPONENT SIDE
SCALE 4:1

4	5520259–5
	5520259–4
	PART NO

THIS DRAWING IS A CONTROLLED DOCUMENT.
DIMENSIONING AND TOLERANCING PER ASME Y14.5M-2009

DIMENSIONS: mm [INCHES]

TOLERANCES UNLESS OTHERWISE SPECIFIED:
0 PLC ± –
1 PLC ± –
2 PLC ± –
3 PLC ± –
4 PLC ± –
ANGLES ± –

MATERIAL: SEE NOTE 1
FINISH: SEE NOTE 1

DWN R.GRZYBOWSKI 05MAY05
CHK P.RECCE 10SEPT2007
APVD S.FLICKINGER 10SEPT2007
PRODUCT SPEC 108–1163
APPLICATION SPEC 114–2048
WEIGHT 0.000000
CUSTOMER DRAWING

TE Connectivity

NAME: MODULAR JACK ASSEMBLY, TOP ENTRY, 8 POSITION, FLANGELESS, WITH PANEL STOPS

SIZE	CAGE CODE	DRAWING NO	RESTRICTED TO
A1	00779	C-5520259	—

SCALE 6:1 | SHEET 1 OF 1 | REV B3

4805 (1/15)