D1RFRD006

REVISION RECORD				
REV	ECO	DESCRIPTION	DRFT	DATE

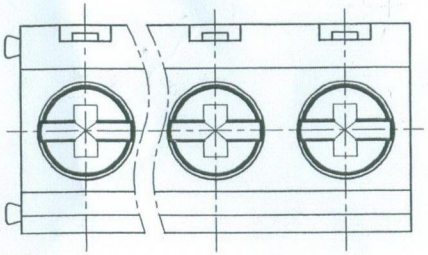

Notes:
1. Pitch:5.08mm ,Poles:2-24P
2. Rated voltage/current:UL 300V/12A
   VDE 250V/15A
3. Operation temperatures:-40℃~+105℃
4. Withstanding Voltage:AC2000V/1Min
5. Insulation Resistance:5000MΩ/DC1000V
6. Wire Range:14~26AWG, 1.5mm²
7. Max. Torque Value:M2.5, 4.08kgf.cm
8. Undimensioned Tolerances:

Pitch range in mm			Naminal dimension range in mm					—
to 6	over 6 to 10	over 10 to 24	to 30	over 30 to 60	over 60 to 100	over 100 to 150	over 150	⌒ ▱
±0.10	±0.15	±0.25	±0.2	±0.3	±0.5	±0.7	±1.0	0.05/10

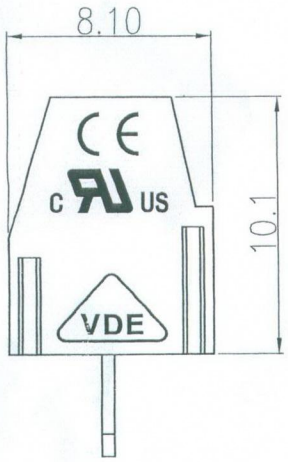

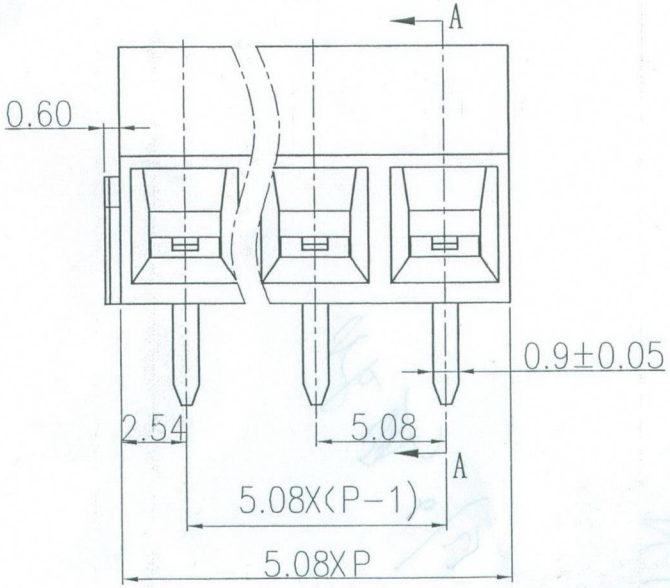

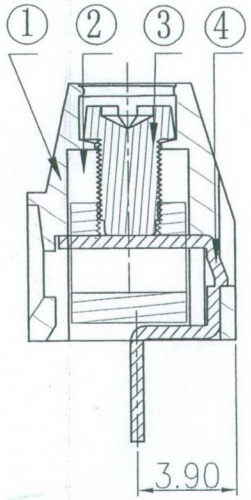

SECTION A-A

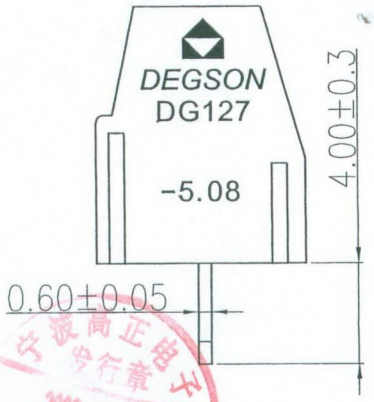

宁波高正电子发行章 2008.6.23 文管中心

ITEM	NAME OF PART	NO. OF PART	Q"TY	MATERIAL	NOTES
1	DG127-5.08-Housing	4052A0YXXA(H)	1	PA66	UL94V-0

4	DG127 Pin header	4028B00010(H)	XX	Brass	SnCe
3	DG127 "+"Screws	S000001680(H)	XX	Steel	$Cr^{3+}Zn$
2	DG127 Brass cage	X000000170(H)	XX	Brass	Ni plated

DETACHED LISTS

MM (INCH)
TOLERANCES EXCEPT AS NOTED
MM .0 ± ± .00 ± ± .000 ± ±
ANGLES ± 1°
THIRD ANGLE PROJECTION

DFTO LJH DATE 06/21/08"
CHKD yej DATE 06/21/08"
MFO DATE
APPVL Hang DATE 06/21/08"
MATERIAL :
G.E :
FINISH :
SCALE :

DEGSON® 宁波高正电子有限公司 DEGSON ELECTRONICS CO., LTD

NAME DG127-5.08-XXP-1Y-02A(H)

DRAWING NO. DG127-5.08-E08 /PART NO.
SIZE A3 REV TO 06/21/08"
DO NOT SCALE DRAWING
SHEET 1 OF 1

\\Degson-wenguan\010 文管中心查收图面\DG127-5.08-02A.dwg, 2008-6-21 16:56:24, Owner