REV	CONTENT	CHK	DATE
V0.0	CONTENT	MYZ	21.06.29

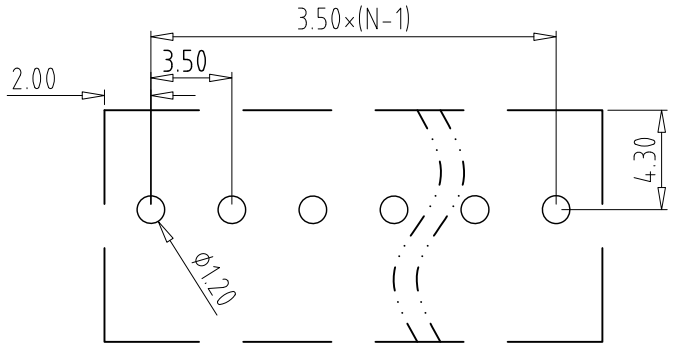

PCB LAYOUT

Electrical :

	UL	IEC
1.Rated Voltage :	300V	130V
2.Rated Current :	10A	10A
3.Torque Value :	M2 ,1.77Lb.in	M2 , 0.2N.m
4.Wire Range:	26-16AWG	0.5-1.0mm^2

5.Stripping Length : 4-5mm
6.Withstanding Voltage : AC1250V/1Min.
7.Operating Temperature : -40°C~+105°C
8.RoHS Compliance
9.Safty Approval : c UL us CE
10."★" Is the key quality control point.

GT381S - 3.5 - XXP - X X - 00
① ② ③ ④ ⑤ ⑥

① Sereies No.

② Pitch

③ Poles
02 02Contacts
03 03Contacts
...
24 24Contacts

④ 1 Single Pitch
2 Double Pitch

⑤ Color: 1 Grey
2 Blue
3 Black
4 Green
5 Orange
6 Red
7 Transparent
8 Yellow
9 White

⑥ Customer Request : 00--Standard

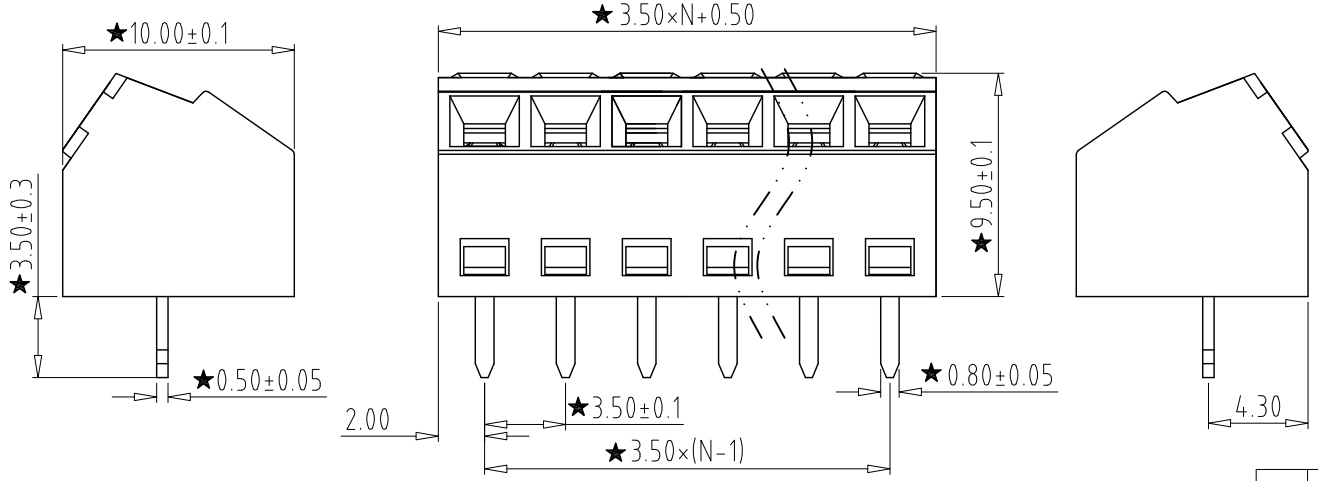

4	SCREW	XX	N	STEEL	Zn Plated
3	BLOCK	XX	N	BRASS	Ni Plated
2	Pin Header	XX	N	BRASS	Tin Plated
1	HOUSING	XX	1	PA66 UL94V-0	SEE NOTE
ITEM	NAME OF PART	NO. OF PART	Q"TY	MATERIAL	NOTE

DWG.	MYZ	DATE	21.06.29	SIZE	A4	UNITS	mm	SHEET/OF	1 / 1
CHK.		DATE		SCALE	1:1				
APP.		DATE		NAME	GT381S-3.5-XXP-XX-00				
Golten 宁波冠泰电子有限公司 NINGBO GOLTEN ELECTRONICS CO., LTD.				DWGNO.	XXXX				

Total Pitch Tolerances in mm									Nominal dimension range in mm									⊥		≒	—		//
over 0 to 30	over 30 to 53	over 53 to 70	over 70 to 90	over 90 to 115	over 115 to 150	over 150 to 250	over 250 to 350	over 350 to 500	over 0 to 30	over 30 to 53	over 53 to 70	over 70 to 90	over 90 to 115	over 115 to 150	over 150 to 200	over 200 to 250	over 250 to 320	over 0 to 10	over 10	all	over 0 to 100	over 100 to 150	over 150
±0.18	±0.20	±0.25	±0.3	±0.35	±0.44	±0.60	±0.70	±0.85	±0.20	±0.25	±0.30	±0.35	±0.44	±0.55	±0.70	±0.80	±0.90	0.2	0.3	0.3	0.2	0.3	0.5