REV	DESCRIPTION	DRFT	DATE

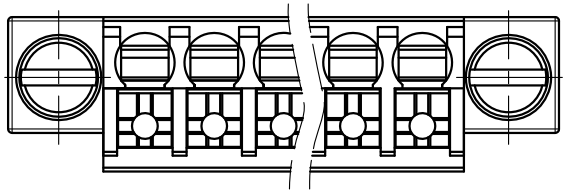

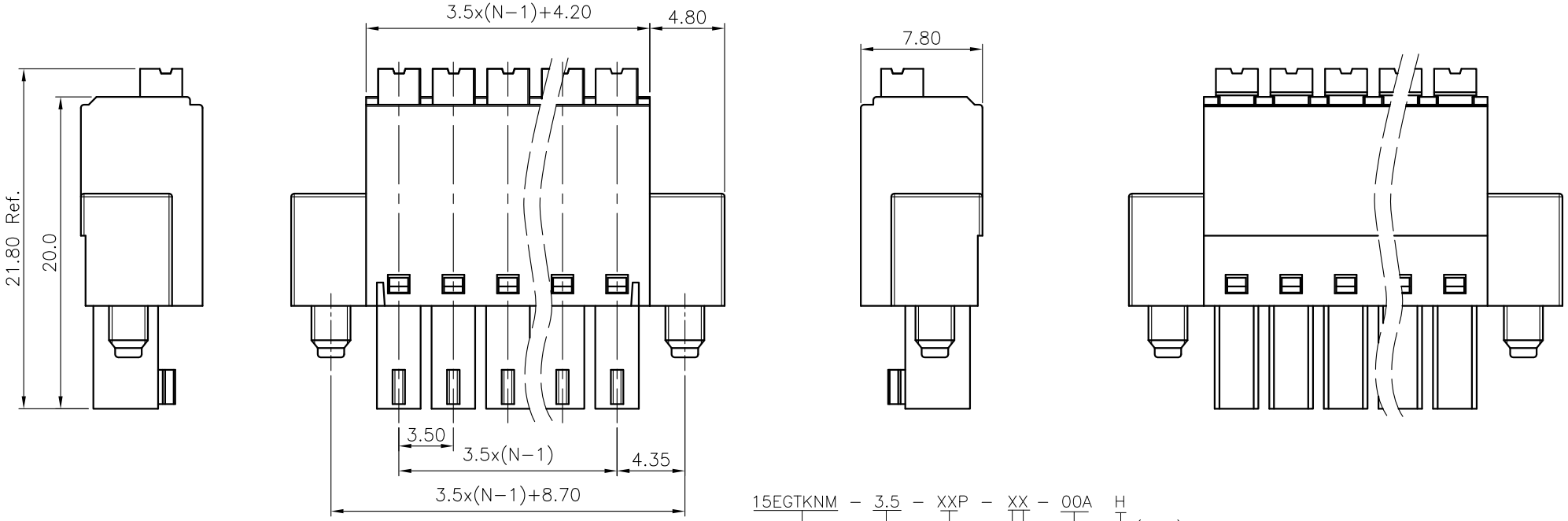

15EGTKNM − 3.5 − XXP − XX − 00A H

- 15EGTKNM: (Sereies No.)
- 3.5: (Pitch)
- XXP: (Poles)
- XX: (Single Pitch)
- 00A: 00A−(Standard)
- H: (RoHS)
- XX: (Color): 1. Grey 2. Blue 3. Black 4. Green 5. Orange 6. Red 7. Transparent 8. Yellow 9. White

ITEM	NAME OF PART	MATERIAL	NOTES
6	Screw	Steel	Zn Plated
5	Housing 2	PA66	UL94V−0
4	Clamp	Copper alloy	Ni Plated
3	Spring	Stainless steel	/
2	Button	POM	UL94 HB
1	Housing 1	PA66	UL94V−0

Electrical:

UL Standard
1. Rated voltage: 300V
2. Rated current: 8A
3. Wire range: 28~16AWG

IEC Standard
1.

Pollution degree	2
Overvoltage category	II
Rate impulse voltage(KV)	2.5
Rate voltage (V)	250
Rate current (A)	8

2. Wire range: 02~1.0mm²

Notes :
1. Pitch: 3.5mm, Poles: N=02~24P
2. Stripping length: 10mm
3. Withstanding voltage : AC1600V/1Min.
4. Operating temperature : −40°C~+105°C
5. RoHS Compliance
6. Undimensioned Tolerances:

Pitch Range In mm			Nominal Dimension Range In mm					— ⌒ ⌭
≤6	6 ~ 10	10 ~ 24	≤30	30 ~ 60	60 ~ 100	100 ~ 150	>150	0.1/10 ∠
±0.15	±0.20	±0.30	±0.30	±0.50	±0.70	±1.00	±1.30	±2°

DETACHED LISTS

APPD:	MA_07/18/19 '	
CHKD:	/	
DRFT:	Nick_07/18/19 '	

THIRD ANGLE PROJECTION

Golten 宁波冠泰电子有限公司 NINGBO GOLTEN ELECTRONICS CO., LTD.

NAME:	15EGTKNM−3.5−XXP−XX−00AH		
TITLE:	CUSTOMER DRAWING	REV	D0−1
DRAWING NO.:	15EGTKNM−3.5−C01	SHEET	1/1
MM (INCH)	DO NOT SCALE DRAWING	SCALE	1:1