OptoSupply
Light It Up

5mm Round Warm White AC LED

OSMMY25111E

■Features

- High Luminous LEDs
- 5mm Round Standard Directivity
- Long Lifetime Operation
- Superior Weather-resistance
- UV Resistant Epoxy
- AC LED

■Applications

- Toys
- Audio
- Games
- Other Lighting

■Outline Dimension

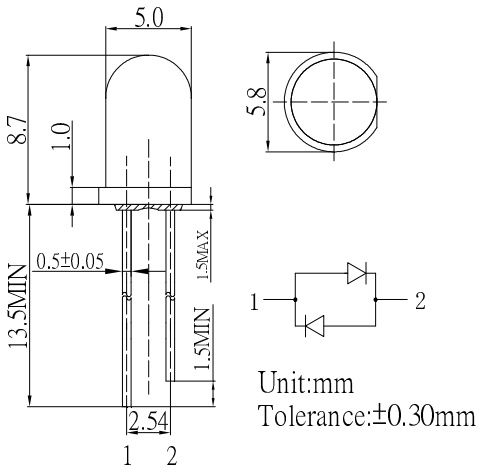

■Absolute Maximum Rating (Ta=25℃)

Item	Symbol	Value		Unit
		White	White	
DC Forward Current	I_F	30	30	mA
Pulse Forward Current*	I_{FP}	100	100	mA
Reverse Voltage	V_R	5	5	V
Power Dissipation	P_D	108	108	mW
Operating Temperature	Topr	-30 ~ +85		℃
Storage Temperature	Tstg	-40~ +100		℃
Lead Soldering Temperature	Tsol	260℃/5sec		-

*Pulse width Max.10ms Duty ratio max 1/10

■Directivity

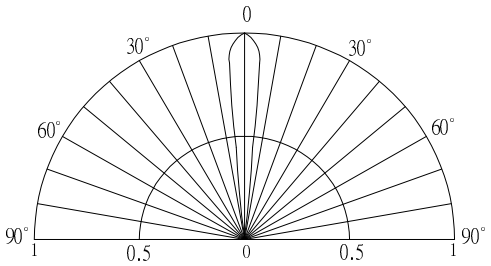

■Electrical -Optical Characteristics (Ta=25℃)

Item	Symbol	Condition	Min.	Typ.	Max.	Unit
DC Forward Voltage	V_F (White)	I_F=20mA	2.9	3.1	3.6	V
	V_F (White)	I_F=20mA	2.9	3.1	3.6	V
DC Reverse Current	I_R	V_R=5V	-	-	10	μA
Chromaticity Coordinates*	x (W/W)	I_F=20mA	-	0.45	-	
	y(W/W)	I_F=20mA	-	0.41	-	
Luminous Intensity*	Iv(White)	I_F=20mA	-	8000	-	mcd
	Iv(White)	I_F=20mA	-	8000	-	mcd
50% Power Angle	$2\theta_{1/2}$	I_F=20mA	-	15	-	deg

*1 Tolerance of measurements of chromaticity coordinate is ±10%
*2 Tolerance of measurements of luminous intensity is ±15%
*3 Tolerance of measurements of forward voltage is ±0.1V