CSR Bluetooth Modules
MB-C05-A2DP
MB-C05-AT

Specification

Version 1.07

04-July-09

Features:

- **CSR BlueCore05 Chip**
- **Bluetooth v2.0 Compliant**
- **Class2**
- **S/W Supported :**
  - **A2DP**
  - **Headset Profile**
  - **Hand Free Profile**
  - **AVRCP**
  - **SPP**
- **Dimension: 12.5X12.5X2.2mm**

Product No.: MB-C05-AT, MB-C05-A2DP
Product Description:
Bluetooth v2.0 Class 2 BT Stereo Module
Issue Date: 2009/08/04
Release Version: 1.07

20F-8, No.107, Sec. 1, Zhongshan Rd.,
Xinzhuang City, Taipei County 242, Taiwan
TEL: +886-2-8522-7628 FAX: +886-2-8522-7784

1. Hardware & Technical Information

1.1 Pin Definition

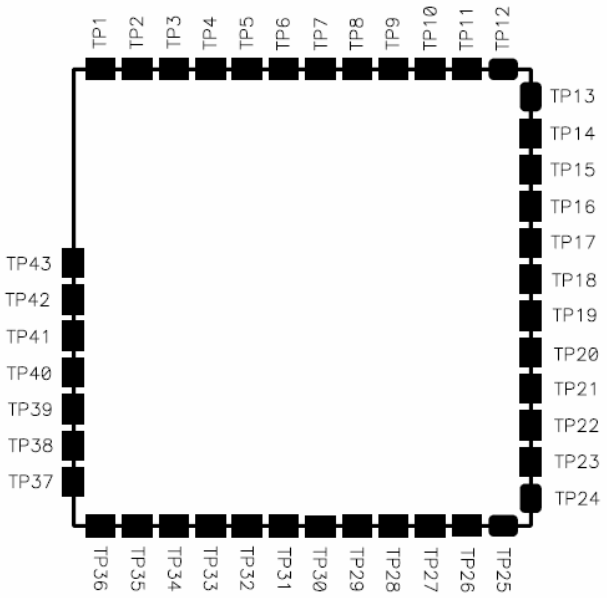

PIN	Name	Type	Note
1	VCC3.3V	(I)	
2	AIO0	(I)	
3	PIO6	(I)	1. Volume Down (MB-C05-A2DP); 2. Reserved (MB-C05-AT).
4	PIO5	(I)	1. Volume Up (MB-C05-A2DP); 2. Reserved (MB-C05-AT).
5	PIO4	(I)	1. Forward (MB-C05-A2DP); 2. Reserved (MB-C05-AT).
6	PIO3	(I)	1. Backward (MB-C05-A2DP); 2. Reserved (MB-C05-AT).
7	PIO2	(I/O)	Reserved
8	PIO1	(I)	1. Answer/Hand off/ Pairing (5 sec “Hi” for Pairing mode) (MB-C05-A2DP); 2. Reserved (MB-C05-AT).
9	PIO0	(I)	1. Play/Pause/Stop (2 sec “Hi” for Stop) (MB-C05-A2DP); 2. Reserved (MB-C05-AT).
10	GND		
11	RF_OUT		
12	GND		
13	MIC_BIAS		
14	MIC_A_N		
15	MIC_A_P		
16	MIC_B_N		

17	MIC_B_P		
18	VDD_AUDIO_1.5V		
19	PCM_CLK		
20	PCM_SYNC		
21	PCM_IN		
22	PCM_OUT		
23	BAT_CHARGE_IN		
24	VDD_BAT		
25	RESET		
26	LED0	(Out)	Power LED. 1. Power On(Hi) ,Pairing mode (Lo:450, Hi:50) (MB-C05-A2DP); 2. Reserved (MB-C05-AT).
27	LED1	(Out)	Bluetooth LED 1. Connected(Lo:965, Hi:35), Disconnected(Lo:2965, Hi:35), Pairing mode(Lo:450, Hi:50) (MB-C05-A2DP); 2. Reserved (MB-C05-AT).
28	SPI_MISO		
29	SPI_CSB		
30	SPI_CLK		
31	SPI_MOSI		
32	UART_RX		
33	UART_TX		
34	UART_CTS		
35	UART_RTS		
36	USB_D+		
37	USB_D-		
38	SPKR_B_N		
39	SPKR_B_P		
40	SPKR_A_N		
41	SPKR_A_P		
42	GND		
43	VEGENABLE_H	(I)	Pull Hi

VCC3.3

Supply voltage connection for the digital I/Os of the module. Supply voltage at this pinwith 3.3 V.

GND

Connect GND pins to the ground plane of the PCB.

VDD_BAT

Input for an internal 1.8 V switched mode regulator combined with output of the internal battery charger. When not powered from a battery, VCC3.3 and VDD_BAT can be combined to a single 3.3 V supply

voltage.

VEGENABLE_H

Enable pin for the internal 1,8 V regulator. Connect this pin to 3.3V

BAT_CHARGE_IN

Charger input voltage. The charger will start operating when voltage to this pin is applied. When the charger is not used, this pin should be left floating.

RESET

The RESET pin is an active low reset.

PIO0 – PIO6

Programmable digital I/O lines. All PIO lines can be configured through software to have either weak or strong pull-ups or pull-downs. Configuration for each PIO line depends on the application. Please check Default configuration in Standard Setup Information.

AIO0

AIO can be used to monitor analogue voltages such as a temperature sensor for the battery charger. AIO can also be configured to be used as digital I/Os. The default setting is None function.

UART_RTS

A CMOS output with a weak internal pull-up. This pin can be used to implement RS232 hardware flow control where RTS (request to send) is an active low indicator. The UART interface requires an external RS232 transceiver chip.

UART_CTS

A CMOS input with a weak internal pull-down. This pin can be used to implement RS232 hardware flow control where CTS (clear to send) is an active low indicator. The UART interface requires an external RS232 transceiver chip.

UART_RX

A CMOS input with a weak internal pull-down. RXD is used to implement UART data transfer from another device to MB-C05. The UART interface requires an external RS232 transceiver chip.

UART_TX

A CMOS output with a weak internal pull-up. TXD is used to implement UART data transfer from MB-C05 to another device. The UART interface requires external RS232 transceiver chip.

PCM_OUT

A CMOS output with a weak internal pull-down. Used in the PCM (pulse code modulation) interface to transmit digitized audio. The PCM interface is shared with the I^2S interface.

PCM_IN

A CMOS input with a weak internal pull-down. Used in the PCM interface to receive digitized audio. The PCM interface is shared with the I^2S interface.

PCM_CLK

A bi-directional synchronous data clock signal pin with a weak internal pull-down. PCMC is used in the PCM interface to transmit or receive the CLK signal. MB-C05 configured as a slave, the PCMC is an input and receives the clock signal from another device. The PCM interface is shared with the I^2S interface.

PCM_SYNC

A bi-directional synchronous data strobe with a weak internal pull-down. MB-C05 configured as a slave, the PCMS is an input and receives the SYNC signal from another device. The PCM interface is shared with the I^2S interface.

USB_D+

A bi-directional USB data line with a selectable internal 1.5 kΩ pull-up implemented as a current source An external series resistor is required to match the connection to the characteristic impedance of the USB cable.

USB_D-

bi -directional USB data line. An external series resistor is required to match the connection to the characteristic impedance of the USB cable.

SPI_CSB

A CMOS input with a weak internal pull-down.

SPI_CLK

A CMOS input for the SPI clock signal with a weak internal pull-down.

SPI_MISO

An SPI data output with a weak internal pull-down.

SPI_MOSI

An SPI data input with a weak internal pull-down.

RF_OUT

This pin connect to chip antenna or printing antenna.

SPKR_B_P and SPKR_B_N

Right channel audio output. The audio output lines should be routed differentially to either the speakers or to the output amplifier, depending on whether or not a single-ended signal is required. Use low impedance ground plane dedicated for the audio signals.

SPKR_A_P and SPKR_A_N

Left channel audio output. The same guidelines apply to this section as discussed previously.

MIC_BIAS

Bias voltage output for a microphone. Use the same layout guidelines as discussed previously with other audio signals.

MIC_B_P and MIC_B_N

Right channel audio inputs. This dual audio input can be configured to be either single ended or fully differential and programmed for either microphone or line input. Route differential pairs close to each other and use a solid dedicated audio ground plane for the audio signals.

MIC_A_P and MIC_A_N

Left channel audio input. The same guidelines apply to this section as discussed previously.

1.2 Mechanical Specification

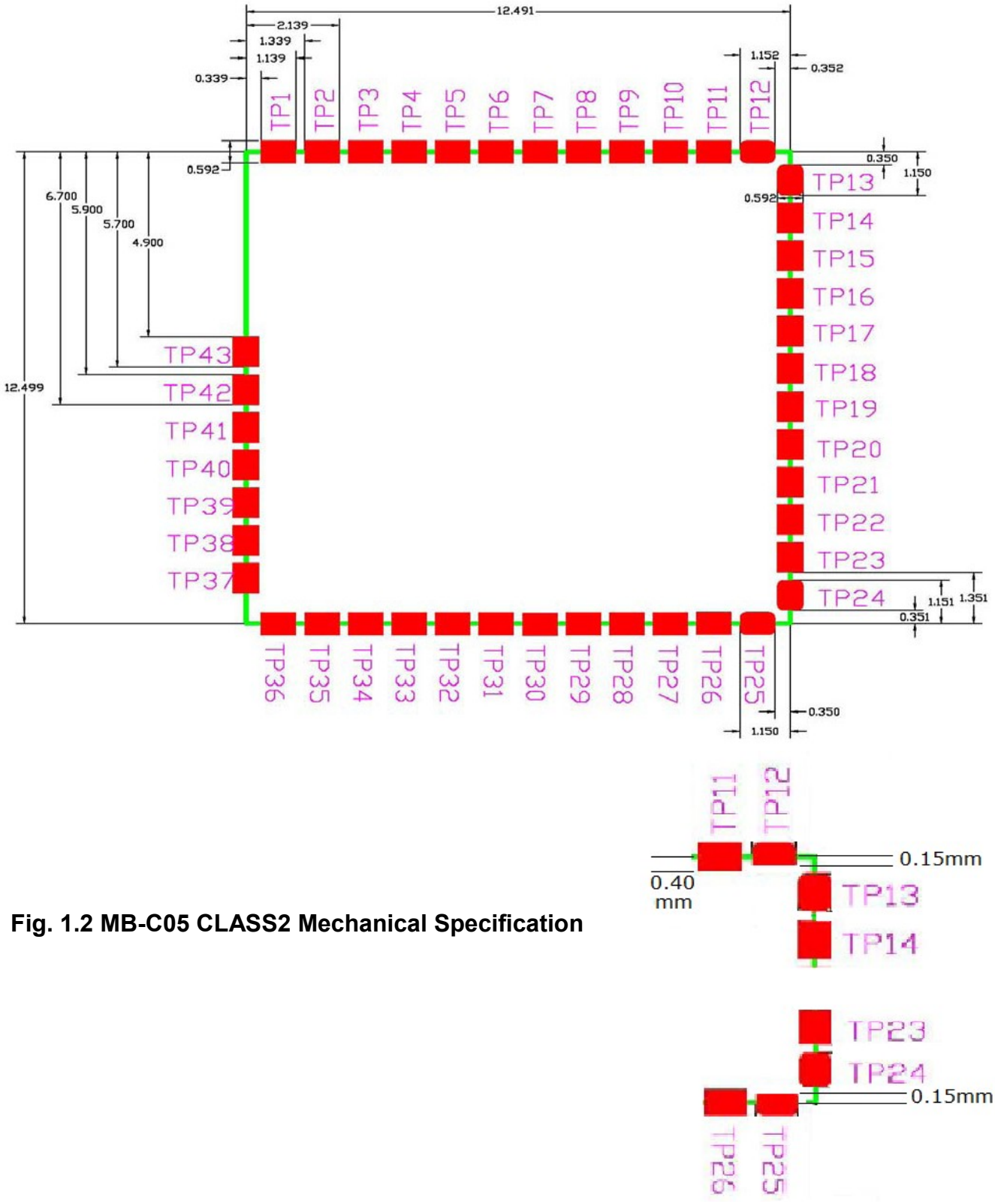

Fig. 1.2 MB-C05 CLASS2 Mechanical Specification

Reference Schematics

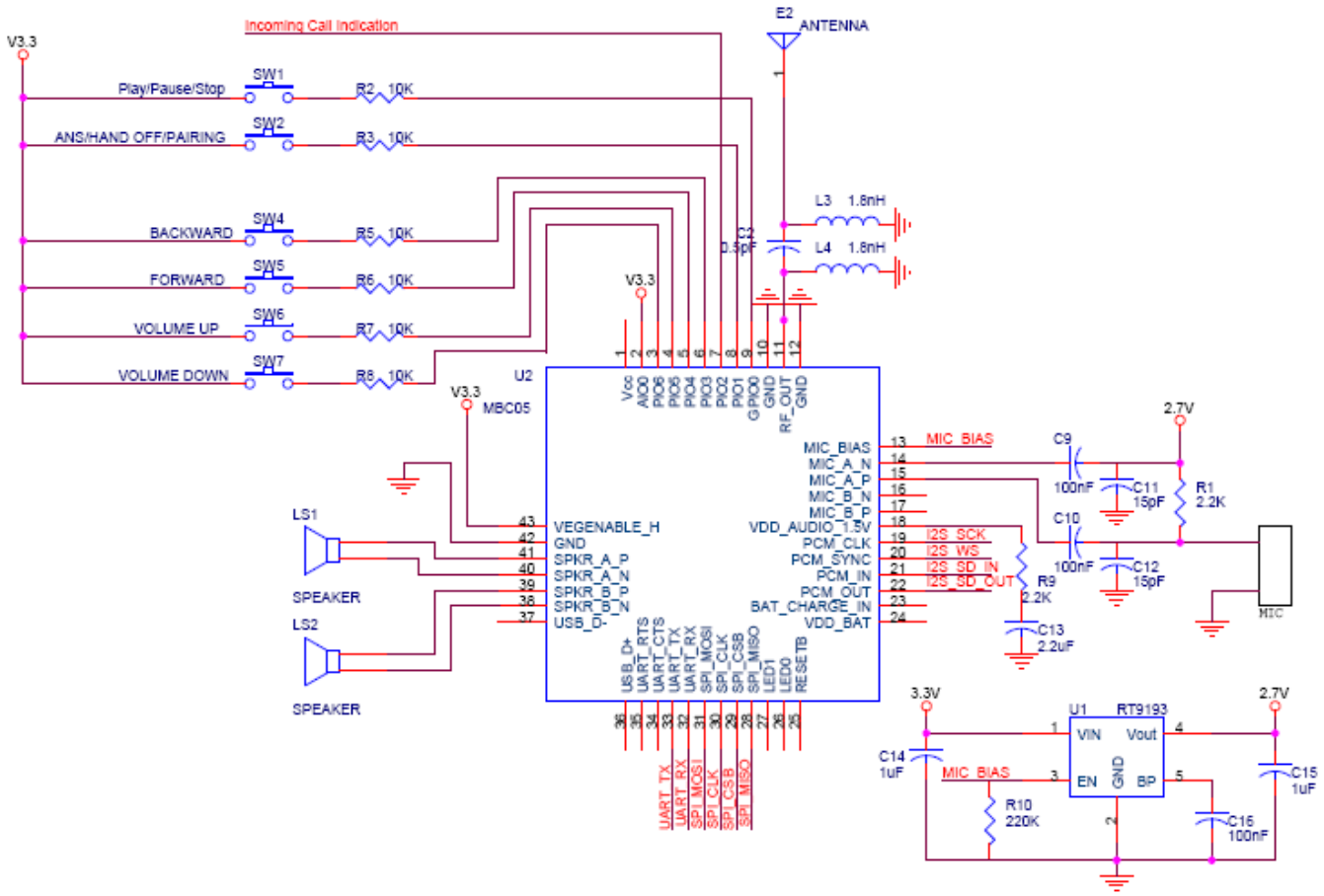

1.3 Block Diagram

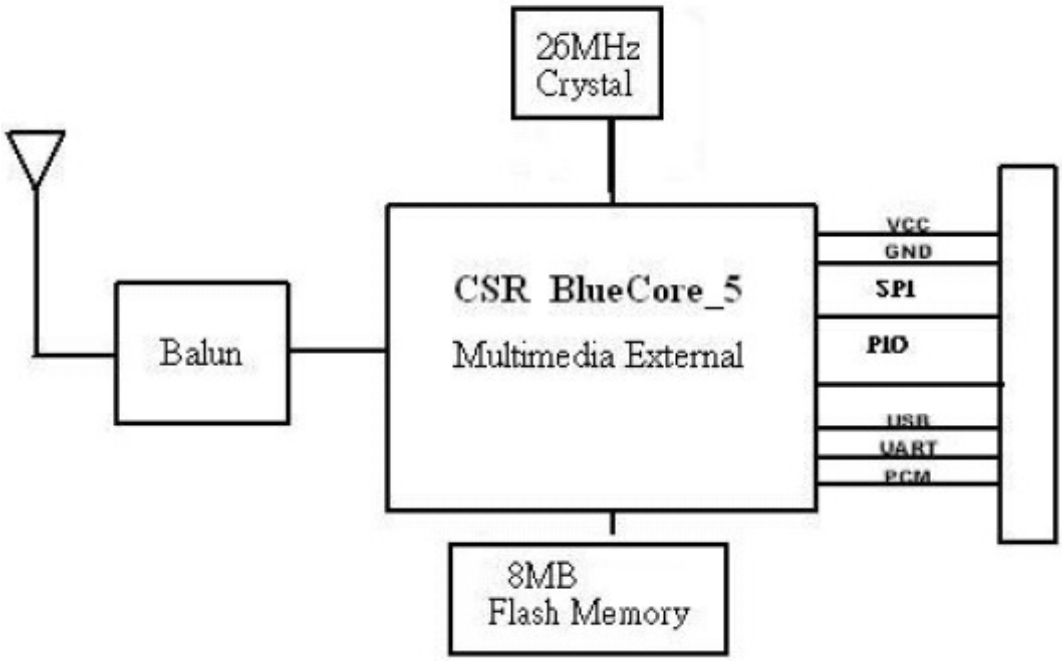

Fig 1.3 MB-C05 Class2 Module Block Diagram

1.4 Electrical Characteristics

■ Voltage Input

	MIN	Typ.	MAX	Unit
Supply Voltage	3.0	3.3	3.6	V

■ Power Consumption

Mode	Avg.
Standby	1mA
Transmit	30mA
Receive	28mA
Pairing	26mA

■ Operating Conditions

Voltage Range	3.3V±0.3V
Operating Temperature Range	-20°C ~ 60°C
Storage Temperature Range	-20°C ~ 80°C
Relative Humidity (Operating)	<=90%
Relative Humidity (Storage)	<=90%

1.5 Radio Characteristics

	Frequency (GHz)	MIN	TYP	MAX	BT Spec	Unit
Sensitivity at 0.1%BER	2.402	≤-84	-80	-	<= -70	dBm
	2.441	≤-84	-80	-		dBm
	2.480	≤-84	-80	-		dBm
RF Transmit Power	2.402	-2	0	4	<= 4	dBm
	2.441	-2	0	4		dBm
	2.480	-2	0	4		dBm
Initial Carrier Frequency Tolerance	2.402	-	5	75	75	kHz
	2.441	-	5	75		kHz
	2.480	-	5	75		kHz
20dB bandwidth for modulated carrier		-	900	1000	<=1000	kHz
Drift (Five slots packet)		-	15	-	40	kHz
Drift Rate		-	13	-	20	kHz
$\Delta f1_{avg}$ "Maximum Modulation"	2.402	140	165	175	140 < $\Delta f1_{avg}$	kHz
	2.441	140	165	175		kHz
	2.480	140	165	175		kHz
$\Delta f2_{max}$ "Minimum Modulation"	2.402	115	190	-	115	kHz
	2.441	115	190	-		kHz
	2.480	115	190	-		kHz

2. Software specification

2.1 Profile

Stack / Profile	MB-C05-A2DP (Class2 BT2.0 module)	MB-C05-AT (Class2 BT2.0 module)
A2DP	V	V
HSP	V	V
HFP	V	V
AVRCP	V	V
SPP	V	

2.2 Software function

2.2.1 MB-C05-A2DP

a. Pairing mode

Power on the module and pull “Hi” PIO1 with 5 sec to make MBC05 switch to pairing mode

b. Connection

Turn on Bluetooth function in master device(like Bluetooth mobile phone) and make a search for Bluetooth device. When master device found Bluetooth device named “SDC BC5”, make Bluetooth connection with SDC BC5 with pin code “0000”. MB-C05 will automatically response itself and established the connection.

c. Volume Up / Down

User can pull one “Hi-Low” on PIO5 for volume up.

User can pull one “Hi-Low” on PIO6 for volume down.

d. Forward / Backward

User can pull one “Hi-Low” on PIO4 for Forward function(A2DP).

User can pull one “Hi-Low” on PIO3 for Backward function(A2DP).

e. Phone call Answer / Hand off

When phone call coming, user can pull one “Hi-Low” on PIO1 for answer the phone and pull one “Hi-Low” on PIO1 to hand off the phone.

User can pull one “Hi-Low” on PIO6 for volume down.

f. Play / Pause / Stop

When listen the music, user can pull one “Hi-Low” on PIO0 for Play or Pause the music. Pull “Hi” 2 seconds to Stop the music.

2.2.2 MB-C05-AT

MB-C05-AT will act only when you send AT command. Detailed AT command, please check the document “A2DP_AT_Commands” .

3. Default setting Information

	Parameter	Value
1	Baud Rate	9600
2	Pin Code Prompt	8888
3	Local Name	SDC BC5
4	Master/Slave	Slave module

4. Customization Information

	Parameter	Value
1	Baud Rate	
2	Pin Code Prompt	
3	Local Name	
5		