REV. 版次	ECN.NO. ECN.编号	REVISE.NO. 处数	REVISER 修订者	APPD. 核准
R1	Drawing			

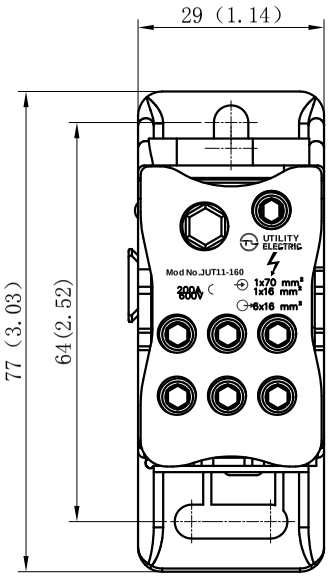

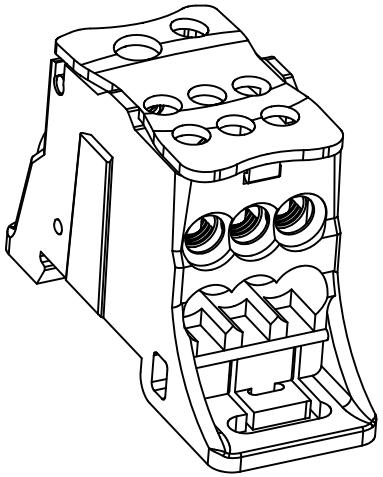

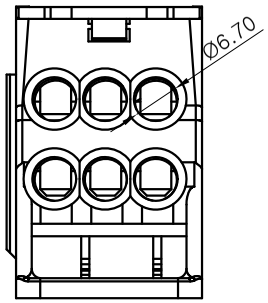

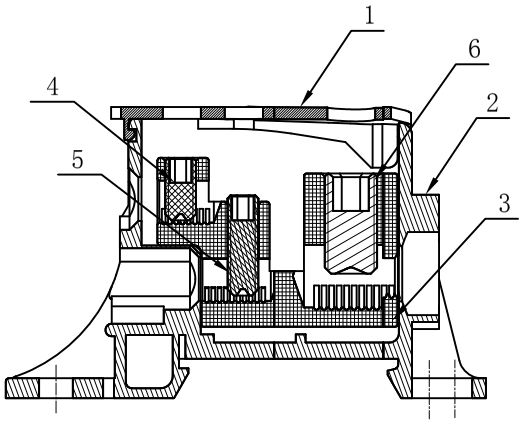

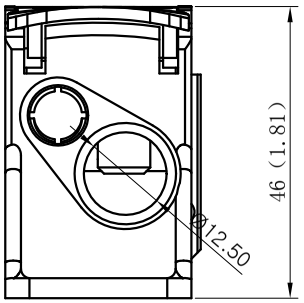

SPECIFICATIONS
1.Material:
①Cover:PC UL94-V0
②Body:PA66 UL94-V0
③Block:COPPER (NI PLATED)
④Screw:STEEL (ZINC PLATED)
⑤Screw:STEEL (ZINC PLATED)
⑥Screw:STEEL (ZINC PLATED)
2.Electrical:
(1)Voltage rating/Current rating:690V / 160A;
(2)Insulation resistance:DC1000V 1000 MΩMin;
(3)Contact resistance:20 mΩMax;
3.Mechanical:
(1)torque force:3.5N.m Max/4.5N.m Max;
(2)Stripping Length :18～20mm;
(3)Connection Capacity:2.5～16mm²/10～70mm²;
(4)Operating temperature:-45° C to +105° C;
4.Standard:IEC 60947-7-1;
5.Certification:CE RoHS;
6.Ingress Protection:IP20 Fingerproofed;

ZHEJIANG UTILITY ELECTRICAL CO.,LTD
浙江尤提乐电气有限公司

>120	±0.80		
>30~120	±0.50		
>6~30	±0.40		
0~6	±0.25	ANGLE	±1°
MAT'L. 材质:			

TYPE NO. 型号:	JUT11-160
TITLE: 名称:	Customer Drawing
APPD. 核准:	
DWG. NO.: 图号:	C-DW1103-0
CHKD. 审核:	
SCALE: 比例:	FULL
PAGE: 页码:	1/1
DR. 设计:	Jammy.ling
UNIT: 单位:	mm[inch]
REV.: 版次:	R1