DEGSON ELECTRONICS CO., LTD.

Product Specification

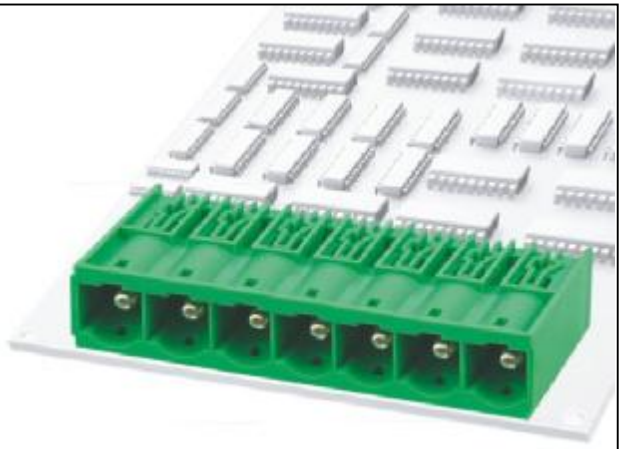

5EDGRC-10.16

APPROVAL		
Electrical		
Standard	**UL**	**IEC**
Rated voltage	600V	600V
Rated current	52A	57A
Withstanding voltage	AC3000V/1Min	
Mechanical		
Ambient temperature	-40℃~+105 ℃	
Dimensions		
Pitch	10.16mm(.400″)	
Poles	2P-9P	
Material		
Housing	PA66,UL94V-0	
Pin header	Copper,Tin-plated	

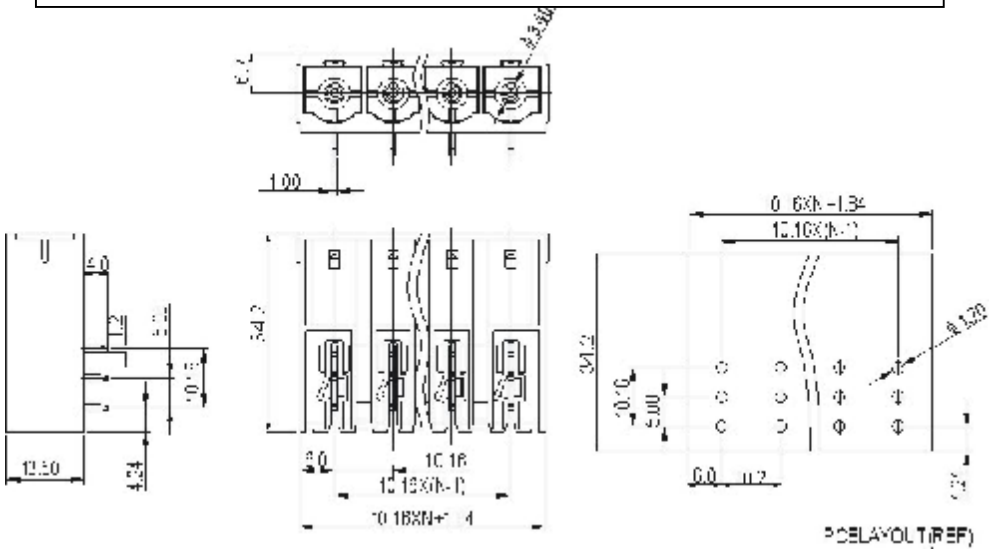

HOW TO ORDER :

[ ] – [ ][ ] P — 1 [ ] — X X X

Customer Request

Series number

No.of pole

1	Single pitch
2	Double pitch

Color

1	Grey	4	Green	7	Trans Parent
2	Blue	5	Orange	8	Yellow
3	Black	6	Red	9	White

mm (INCH)	DEGSON ELECTRONICS CO., LTD.
THIROANGLE PROJECTION	NAME 5EDGRC-10.16