# DEGSON ELECTRONICS CO., LTD.

**Product Specification**

DEVE-LOPING

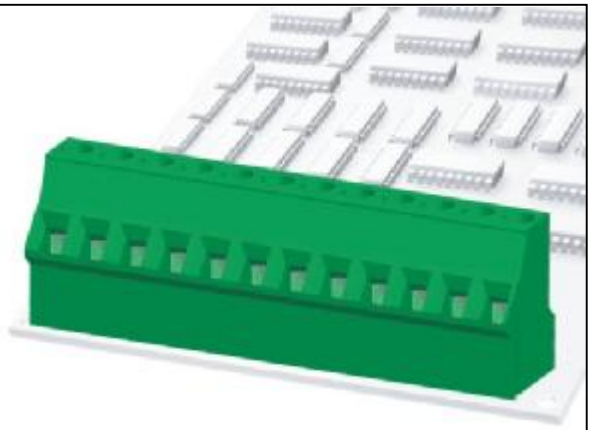

## DG504-5.08

| APPROVAL | | |
|---|---|---|
| **Electrical** | | |
| Standard | **UL** | **IEC** |
| Rated voltage | 300V | 250V |
| Rated current | 10A | 18A |
| Wire range | 24-12AWG | 2.5mm$^2$ |
| Withstanding voltage | AC2000V/1Min | |
| **Menchanical** | | |
| Torque | 0.4Nm(3.5Lb-In) | |
| Ambient temperature | -40℃~+105 ℃ | |
| Strip length | 7mm | |
| **Dimensions** | | |
| pitch | 5.08mm(.200″ ) | |
| Poles | 2P,3P-24P | |
| **Material** | | |
| Housing | PA66,UL94V-0 | |
| Screws | M2.5,Steel, Cr $^{3+}$Znplated | |
| Pin header | Brass,Tin plated | |
| Cage | Brass,Ni plated | |

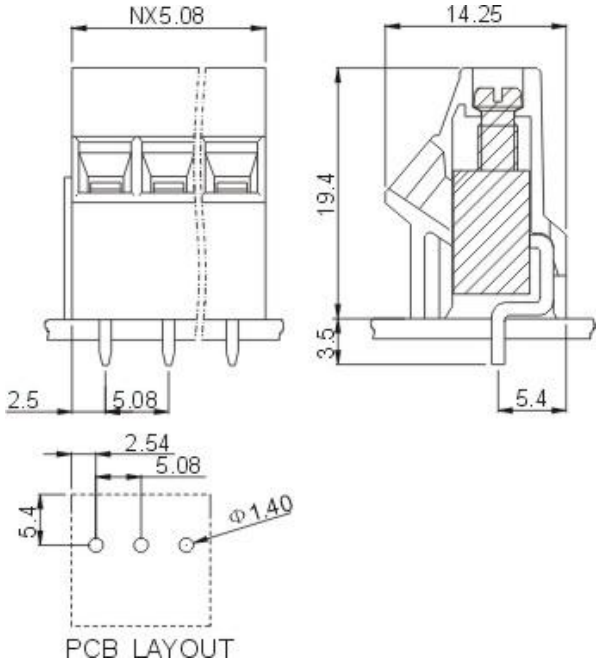


## HOW TO ORDER :

[ ] – [ ][ ] P – [1][ ] – [X][X][X] Customer Request

**Series number**

**No.of pole**

| | |
|---|---|
| 1 | Single pitch |
| 2 | Double pitch |

**Color**

| | | | | | |
|---|---|---|---|---|---|
| 1 | Grey | 4 | Green | 7 | Trans Parent |
| 2 | Blue | 5 | Orange | 8 | Yellow |
| 3 | Black | 6 | Red | 9 | White |

| | |
|---|---|
| mm (INCH) | DEGSON ELECTRONICS CO., LTD. |
| THIRDANGLE PROJECTION | NAME DG504-5.08 |